N-channel Enhanced mode TO-220F MOSFET

Features

- High ruggedness
- Low $R_{DS(ON)}$ (Typ 0.16Ω)@V_{GS}=10V
- Low Gate Charge (Typ 40nC)
- Improved dv/dt Capability
- 100% Avalanche Tested
- Application: Charger, LED, PC Power

TO-220F

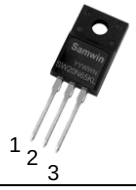

1. Gate 2. Drain 3. Source

BV_{DSS} : 650V
I_D : 20A
$R_{DS(ON)}$: 0.16Ω

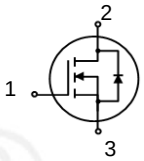

General Description

This power MOSFET is produced with advanced super junction technology of SAMWIN. This technology enable the power MOSFET to have better characteristics, including fast switching time, low on resistance, low gate charge and especially excellent avalanche characteristics.

Order Codes

Item	Sales Type	Marking	Package	Packaging
1	SW F 20N65KL	SW20N65KL	TO-220F	TUBE

Absolute maximum ratings

Symbol	Parameter	Value	Unit
V_{DSS}	Drain to source voltage	650	V
I_D	Continuous drain current (@T_C=25°C)	20*	A
	Continuous drain current (@T_C=100°C)	12.6*	A
I_{DM}	Drain current pulsed (note 1)	60	A
V_{GS}	Gate to source voltage	±30	V
E_{AS}	Single pulsed avalanche energy (note 2)	500	mJ
E_{AR}	Repetitive avalanche energy (note 1)	50	mJ
dv/dt	MOSFET dv/dt ruggedness (@VDS=0~400V)	30	V/ns
dv/dt	Peak diode recovery dv/dt (note 3)	20	V/ns
P_D	Total power dissipation (@T_C=25°C)	62.5	W
	Derating factor above 25°C	0.5	W/°C
T_{STG}, T_J	Operating junction temperature & storage temperature	-55 ~ + 150	°C
T_L	Maximum lead temperature for soldering purpose, 1/8 from case for 5 seconds.	300	°C

*. Drain current is limited by junction temperature.

Thermal characteristics

Symbol	Parameter	Value	Unit
R_{thjc}	Thermal resistance, Junction to case	2.0	°C/W
R_{thja}	Thermal resistance, Junction to ambient	48.6	°C/W

Copyright@ Semipower Technology Co., Ltd. All rights reserved.

Electrical characteristic (T_J = 25°C unless otherwise specified)

Symbol	Parameter	Test conditions	Min.	Typ.	Max.	Unit
Off characteristics						
BV_{DSS}	Drain to source breakdown voltage	V_{GS}=0V, I_D=250uA	650			V
ΔBV_{DSS} / ΔT_J	Breakdown voltage temperature coefficient	I_D=250uA, referenced to 25°C		0.57		V/°C
I_{DSS}	Drain to source leakage current	V_{DS}=650V, V_{GS}=0V			1	uA
		V_{DS}=520V, T_J=125°C			50	uA
I_{GSS}	Gate to source leakage current, forward	V_{GS}=30V, V_{DS}=0V			100	nA
	Gate to source leakage current, reverse	V_{GS}=-30V, V_{DS}=0V			-100	nA
On characteristics						
$V_{GS(TH)}$	Gate threshold voltage	V_{DS}=V_{GS}, I_D=250uA	2		4	V
$R_{DS(ON)}$	Drain to source on state resistance	V_{GS}=10V, I_D=10A,T_J=25°C		0.16	0.19	Ω
		V_{GS}=10V, I_D=10A,T_J=125°C		0.33		Ω
G_{fs}	Forward transconductance	V_{DS}=30V, I_D=10A		12		S
Dynamic characteristics						
C_{iss}	Input capacitance	V_{GS}=0V, V_{DS}=200V, f=1MHz		1153		pF
C_{oss}	Output capacitance			71		
C_{rss}	Reverse transfer capacitance			4		
$t_{d(on)}$	Turn on delay time	V_{DS}=325V, I_D=20A, R_G=10Ω, V_{GS}=10V (note 4,5)		14		ns
t_r	Rising time			36		
$t_{d(off)}$	Turn off delay time			59		
t_f	Fall time			28		
Q_g	Total gate charge	V_{DS}=520V, V_{GS}=10V, I_D=20A I_G=4mA (note 4,5)		40		nC
Q_{gs}	Gate-source charge			8		
Q_{gd}	Gate-drain charge			22		
R_g	Gate resistance	V_{DS}=0V, Scan F mode		1.4		Ω

Source to drain diode ratings characteristics

Symbol	Parameter	Test conditions	Min.	Typ.	Max.	Unit
I_S	Continuous source current	Integral reverse p-n Junction diode in the MOSFET			20	A
I_{SM}	Pulsed source current				60	A
V_{SD}	Diode forward voltage drop.	I_S=20A, V_{GS}=0V			1.4	V
t_{rr}	Reverse recovery time	I_S=20A, V_{GS}=0V, dI_F/dt=100A/us		390		ns
Q_{rr}	Reverse recovery charge			5.8		uC

※. Notes
1. Repeatitive rating : pulse width limited by junction temperature.
2. L =40mH, I_{AS} =5A, V_{DD}=100V, R_G=25Ω, Starting T_J = 25°C
3. I_{SD} ≤ 20A, di/dt = 100A/us, V_{DD} ≤ BV_{DSS}, Staring T_J =25°C
4. Pulse Test : Pulse Width ≤ 300us, duty cycle ≤ 2%.
5. Essentially independent of operating temperature.

Copyright@ Semipower Technology Co., Ltd. All rights reserved.

Fig. 1. On-state characteristics

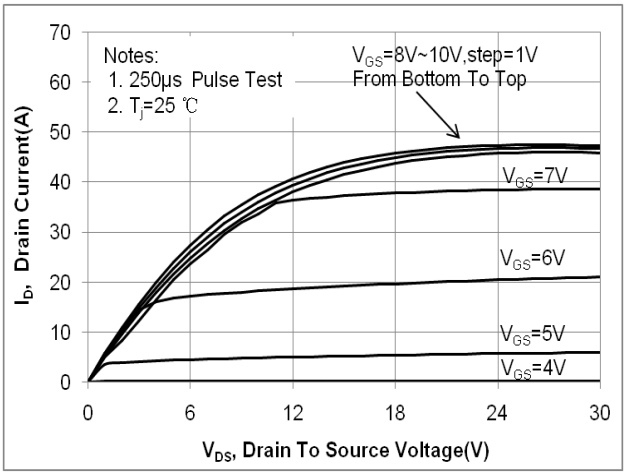

Fig. 2. Transfer Characteristics

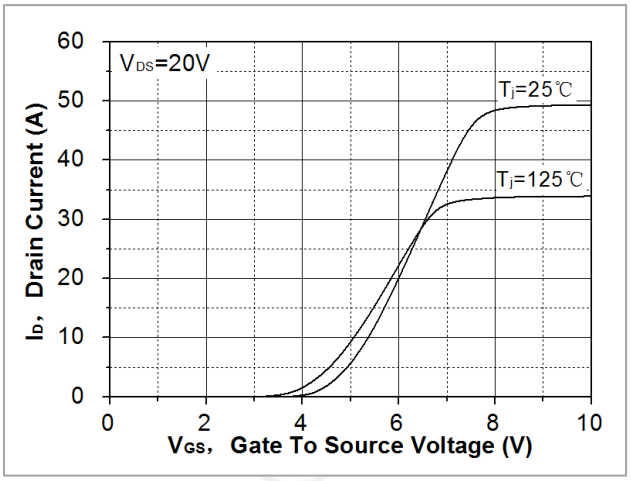

Fig. 3. On-resistance variation vs. drain current and gate voltage

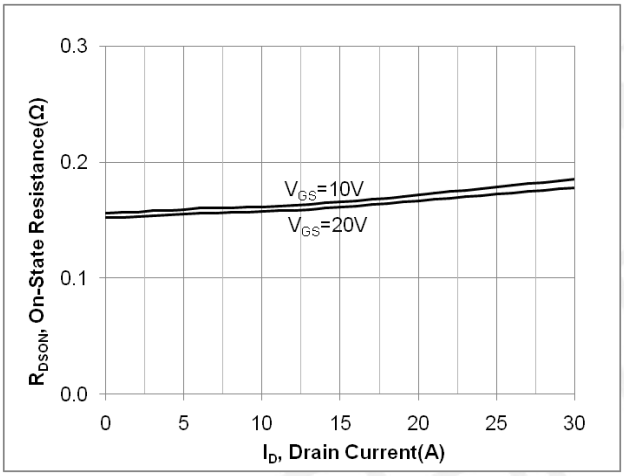

Fig. 4. On-state current vs. diode forward voltage

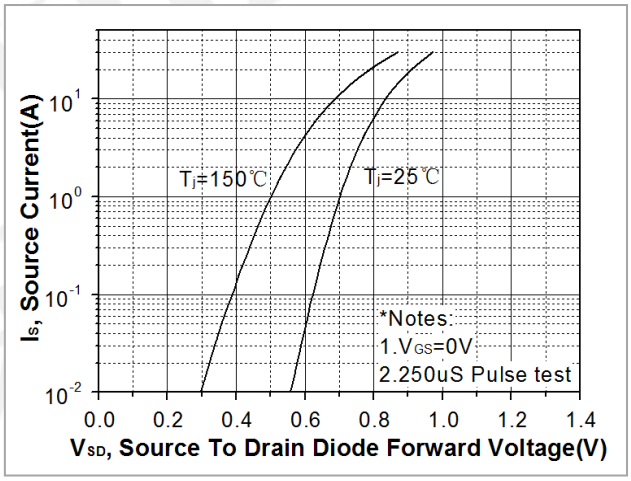

Fig 5. Breakdown voltage variation vs. junction temperature

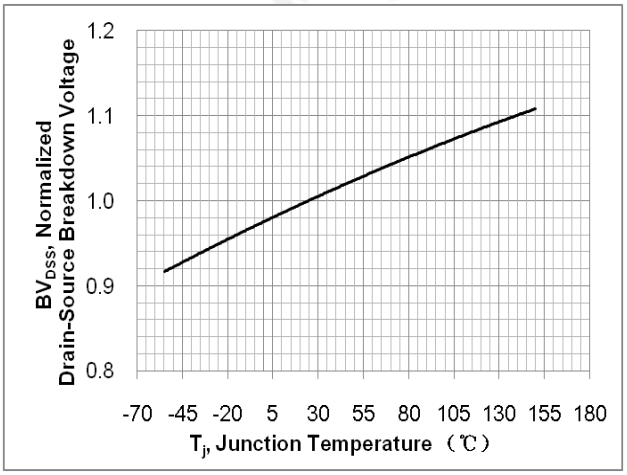

Fig. 6. On-resistance variation vs. junction temperature

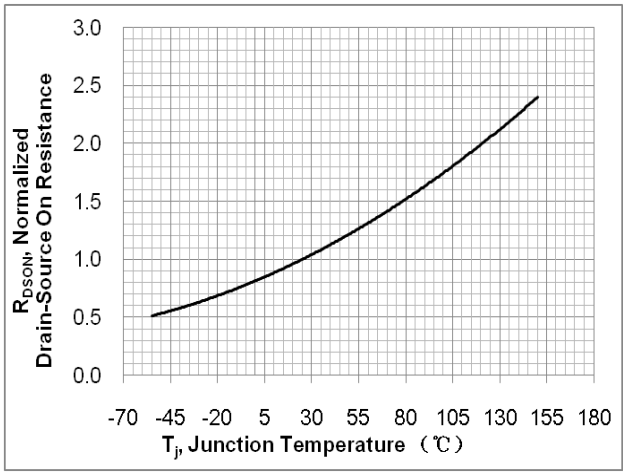

Copyright@ Semipower Technology Co., Ltd. All rights reserved.

Fig. 7. Gate charge characteristics

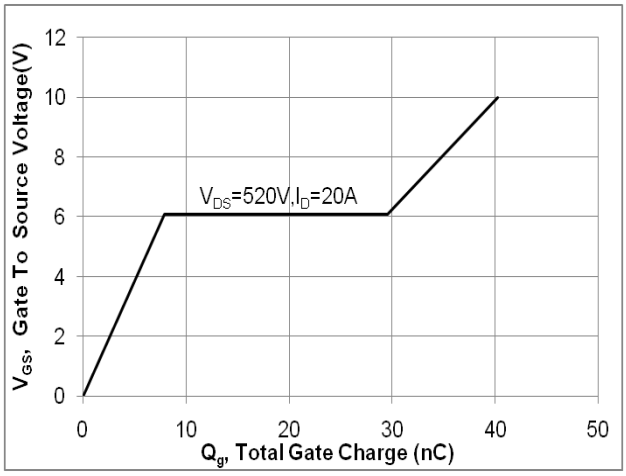

Fig. 8. Capacitance Characteristics

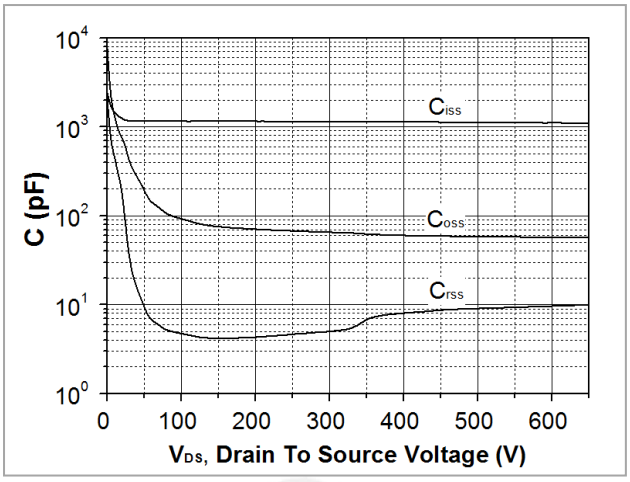

Fig. 9. Maximum safe operating area

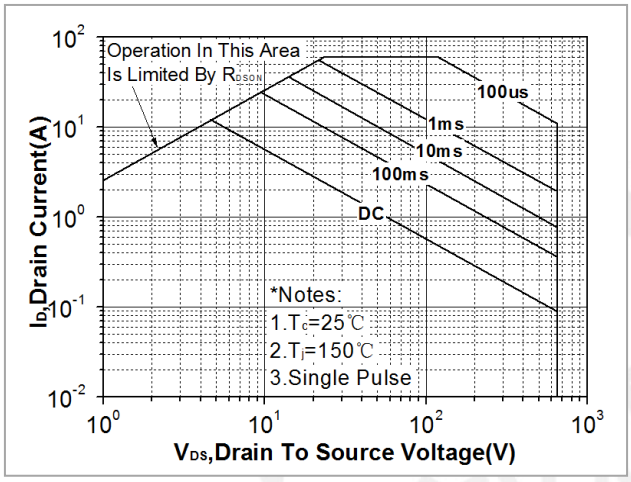

Fig. 10. Transient thermal response curve

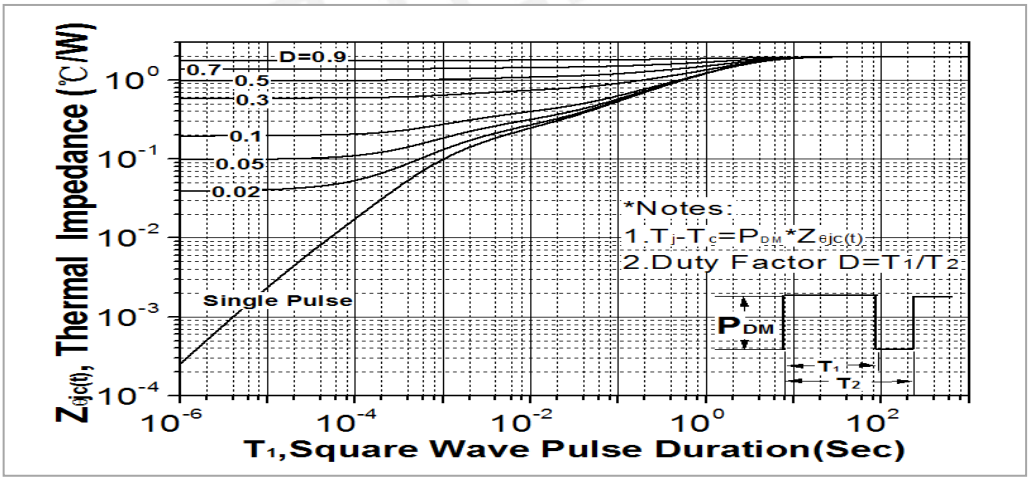

Copyright@ Semipower Technology Co., Ltd. All rights reserved.

Fig. 11. Gate charge test circuit & waveform

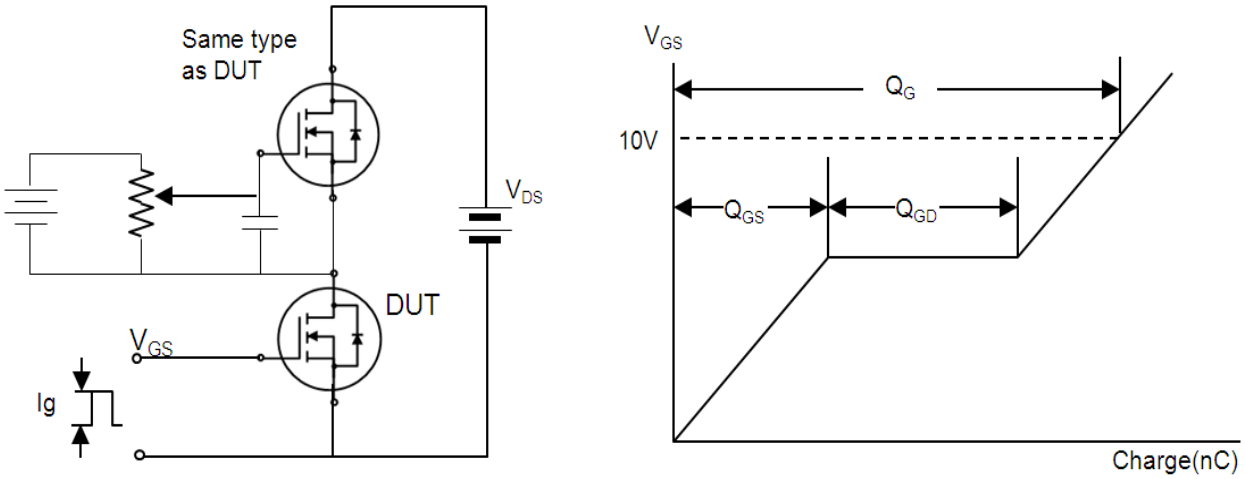

Fig. 12. Switching time test circuit & waveform

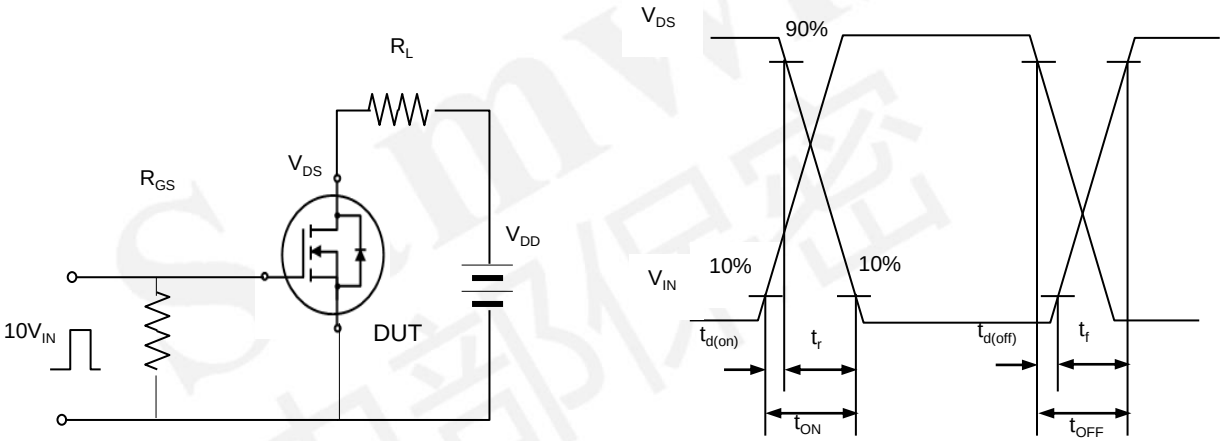

Fig. 13. Unclamped Inductive switching test circuit & waveform

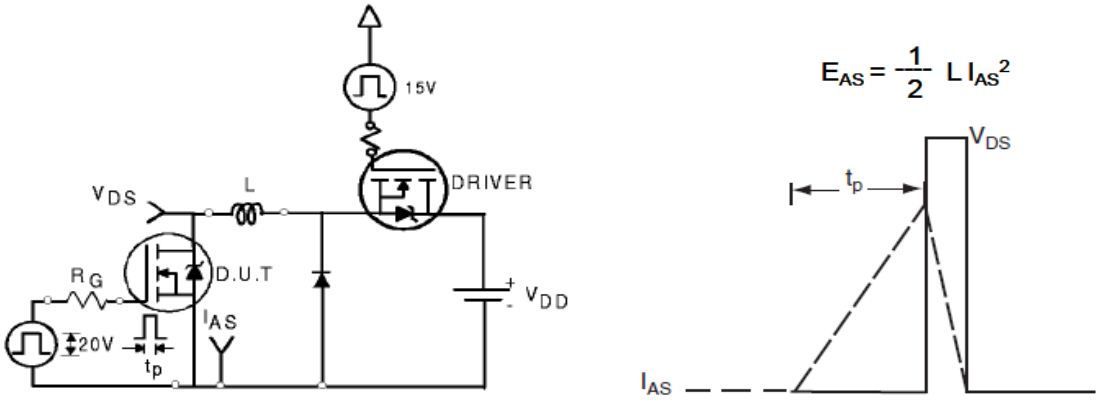

Samwin 内部机密

Fig. 14. Peak diode recovery dv/dt test circuit & waveform

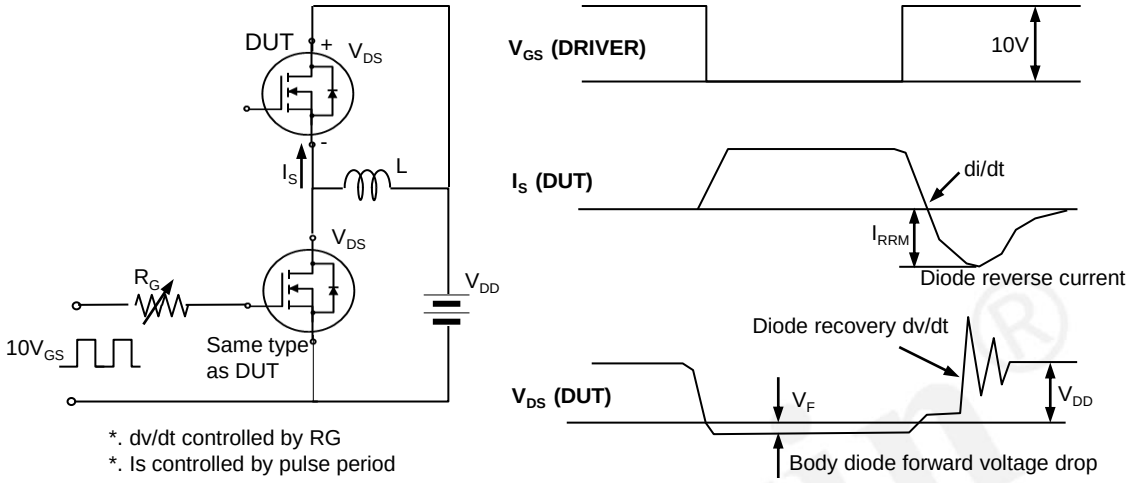

Samwin®
内部保密

DISCLAIMER

* All the data & curve in this document was tested in SEMIPOWER TESTING & APPLICATION CENTER.
* This product has passed the PCT,TC,HTRB,HTGB,HAST,PC and Solderdunk reliability testing.
* Qualification standards can also be found on the Web site (**http://www.semipower.com.cn**)
* Suggestions for improvement are appreciated, Please send your suggestions to **samwin@samwinsemi.com**

Copyright@ Semipower Technology Co., Ltd. All rights reserved.