N-channel Enhanced mode TO-252 MOSFET

Features

- High ruggedness
- Low $R_{DS(ON)}$ (Typ 6.6mΩ)@V_{GS}=10V
- Low Gate Charge (Typ 109nC)
- Improved dv/dt Capability
- 100% Avalanche Tested
- Application:Synchronous Rectification, Li Battery Protect Board, Inverter

TO-252

1. Gate 2.Drain 3.Source

BV_{DSS} : 72V
I_D :100 A
$R_{DS(ON)}$: 6.6mΩ

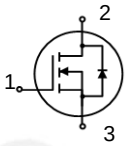

General Description

This power MOSFET is produced with advanced technology of SAMWIN. This technology enable the power MOSFET to have better characteristics, including fast switching time, low on resistance, low gate charge and especially excellent avalanche characteristics.

Order Codes

Item	Sales Type	Marking	Package	Packaging
1	SW D 058R72E7T	SW058R72E7T	TO-252	REEL

Absolute maximum ratings

Symbol	Parameter	Value	Unit
V_{DSS}	Drain to source voltage	72	V
I_D	Continuous drain current (@T_C=25ºC)	100*	A
	Continuous drain current (@T_C=100ºC)	79*	A
I_{DM}	Drain current pulsed (note 1)	400	A
V_{GS}	Gate to source voltage	±20	V
E_{AS}	Single pulsed avalanche energy (note 2)	256	mJ
E_{AR}	Repetitive avalanche energy (note 1)	25	mJ
dv/dt	Peak diode recovery dv/dt (note 3)	5	V/ns
P_D	Total power dissipation (@T_C=25ºC)	150.6	W
	Derating factor above 25ºC	1.2	W/ºC
T_{STG}, T_J	Operating junction temperature & storage temperature	-55 ~ + 150	ºC

*. Drain current is limited by junction temperature.

Thermal characteristics

Symbol	Parameter	Value	Unit
R_{thjc}	Thermal resistance, Junction to case	0.83	ºC/W

Copyright@ Semipower Technology Co., Ltd. All rights reserved.

Electrical characteristic (T_J = 25°C unless otherwise specified)

Symbol	Parameter	Test conditions	Min.	Typ.	Max.	Unit
Off characteristics						
BV_{DSS}	Drain to source breakdown voltage	V_{GS}=0V, I_D=250uA	72			V
ΔBV_{DSS} / ΔT_J	Breakdown voltage temperature coefficient	I_D=250uA, referenced to 25°C		0.03		V/°C
I_{DSS}	Drain to source leakage current	V_{DS}=72V, V_{GS}=0V			1	uA
		V_{DS}=58V, T_J=125°C			50	uA
I_{GSS}	Gate to source leakage current, forward	V_{GS}=20V, V_{DS}=0V			100	nA
	Gate to source leakage current, reverse	V_{GS}=-20V, V_{DS}=0V			-100	nA
On characteristics						
$V_{GS(TH)}$	Gate threshold voltage	V_{DS}=V_{GS}, I_D=250uA	2		4	V
$R_{DS(ON)}$	Drain to source on state resistance	V_{GS}=10V, I_D=40A,T_J=25°C		6.6	7.3	mΩ
		V_{GS}=10V, I_D=40A,T_J=125°C		8.7		mΩ
G_{fs}	Forward transconductance	V_{DS}=5V, I_D=30A		46		S
Dynamic characteristics						
C_{iss}	Input capacitance	V_{GS}=0V, V_{DS}=36V, f=1MHz		5106		pF
C_{oss}	Output capacitance			344		
C_{rss}	Reverse transfer capacitance			293		
$t_{d(on)}$	Turn on delay time	V_{DS}=36V, I_D=30A, R_G=4.7Ω, V_{GS}=10V (note 4,5)		26		ns
t_r	Rising time			67		
$t_{d(off)}$	Turn off delay time			90		
t_f	Fall time			43		
Q_g	Total gate charge	V_{DS}=58V, V_{GS}=10V, I_D=30A , I_G=5mA (note 4,5)		109		nC
Q_{gs}	Gate-source charge			26		
Q_{gd}	Gate-drain charge			41		
R_g	Gate resistance	V_{DS}=0V, Scan F mode		3.6		Ω

Source to drain diode ratings characteristics

Symbol	Parameter	Test conditions	Min.	Typ.	Max.	Unit
I_S	Continuous source current	Integral reverse p-n Junction diode in the MOSFET			100	A
I_{SM}	Pulsed source current				400	A
V_{SD}	Diode forward voltage drop.	I_S=45A, V_{GS}=0V			1.4	V
t_{rr}	Reverse recovery time	I_S=30A, V_{GS}=0V, dI_F/dt=100A/us		44		ns
Q_{rr}	Reverse recovery charge			73		nC

※. Notes
1. Repeatitive rating : pulse width limited by junction temperature.
2. L =0.5mH, I_{AS} =32A, V_{DD}=35V, R_G=25Ω, Starting T_J = 25°C
3. I_{SD} ≤30A, di/dt = 100A/us, V_{DD} ≤ BV_{DSS}, Staring T_J =25°C
4. Pulse Test : Pulse Width ≤ 300us, duty cycle ≤ 2%.
5. Essentially independent of operating temperature.

Copyright@ Semipower Technology Co., Ltd. All rights reserved.

Fig. 1. On-state characteristics

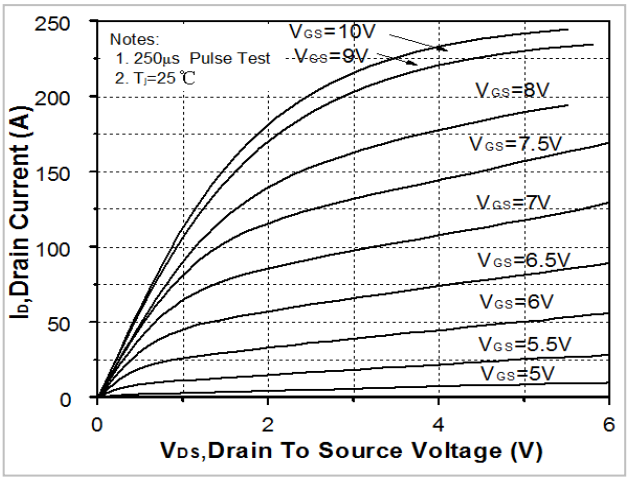

Fig. 2. Transfer Characteristics

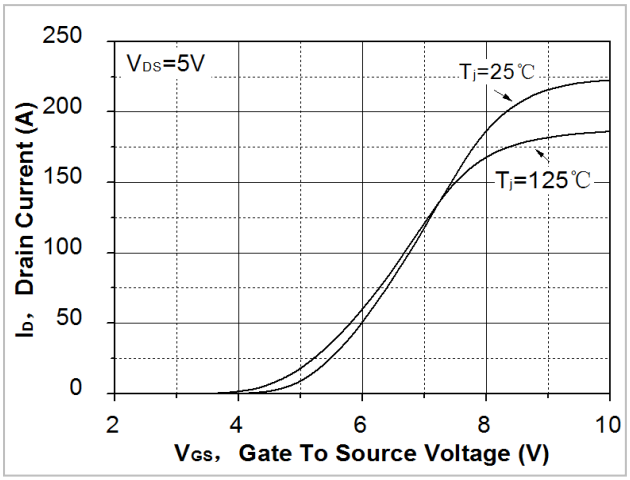

Fig. 3. On-resistance variation vs. drain current and gate voltage

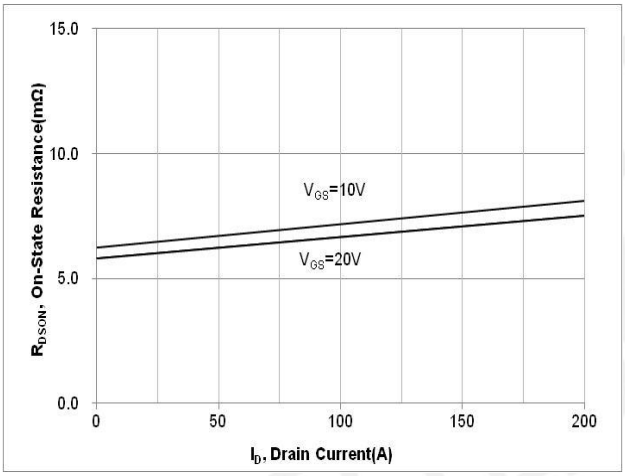

Fig. 4. On-state current vs. diode forward voltage

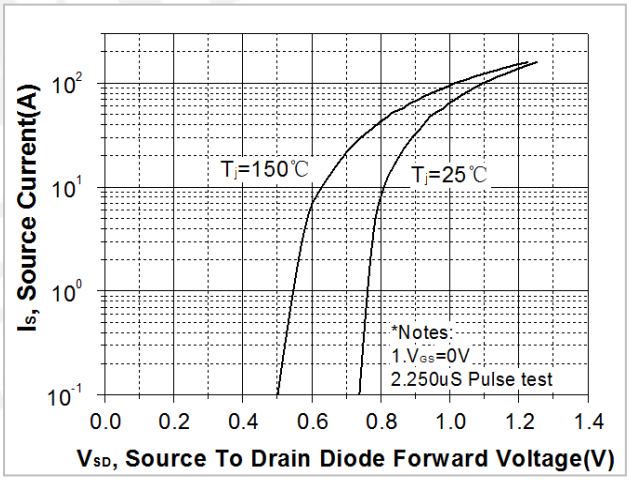

Fig 5. Breakdown voltage variation vs. junction temperature

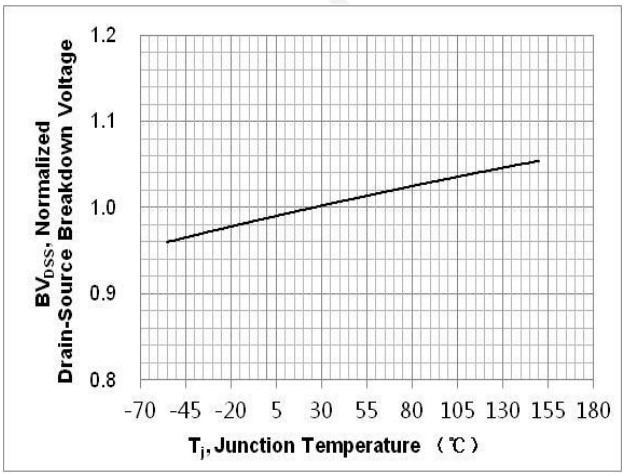

Fig. 6. On-resistance variation vs. junction temperature

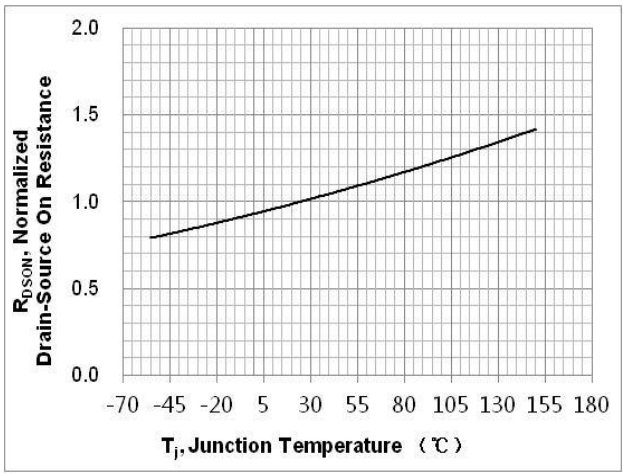

Copyright@ Semipower Technology Co., Ltd. All rights reserved.

Fig. 7. Gate charge characteristics

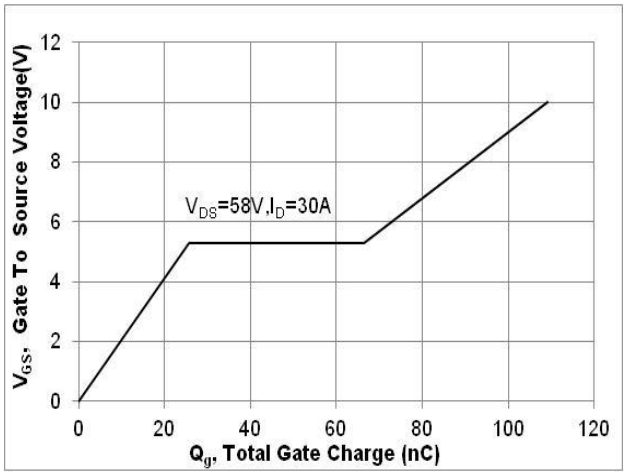

Fig. 8. Capacitance Characteristics

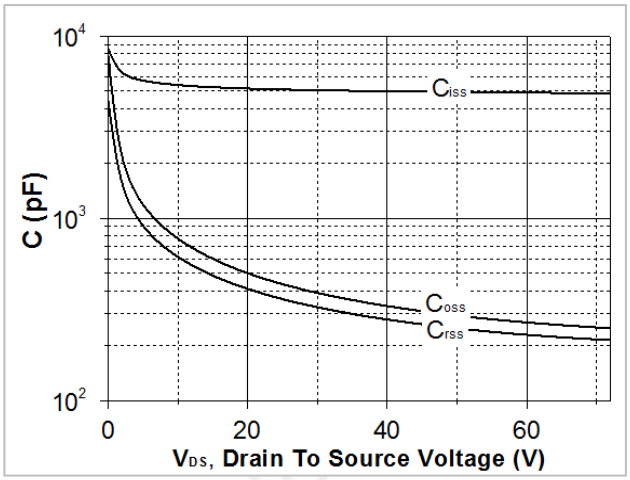

Fig. 9. Maximum safe operating area

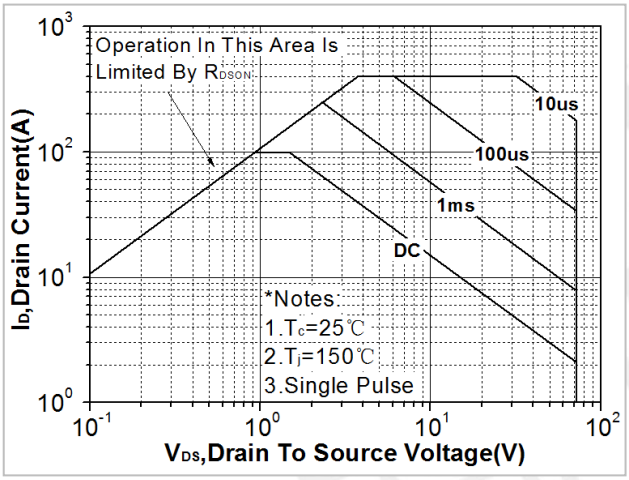

Fig. 10. Maximum drain current vs. case temperature

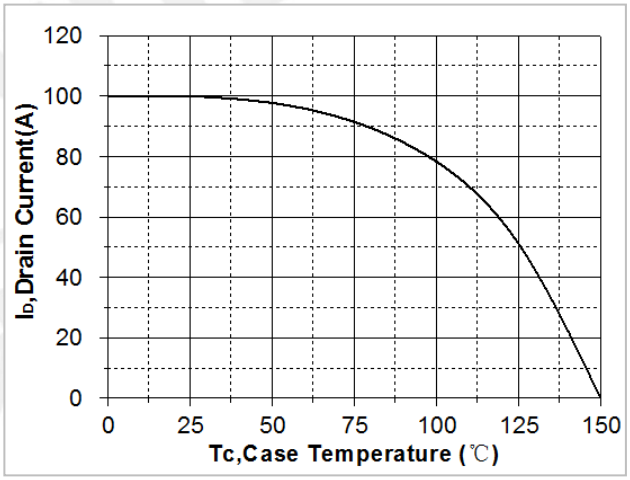

Fig. 11. Transient thermal response curve

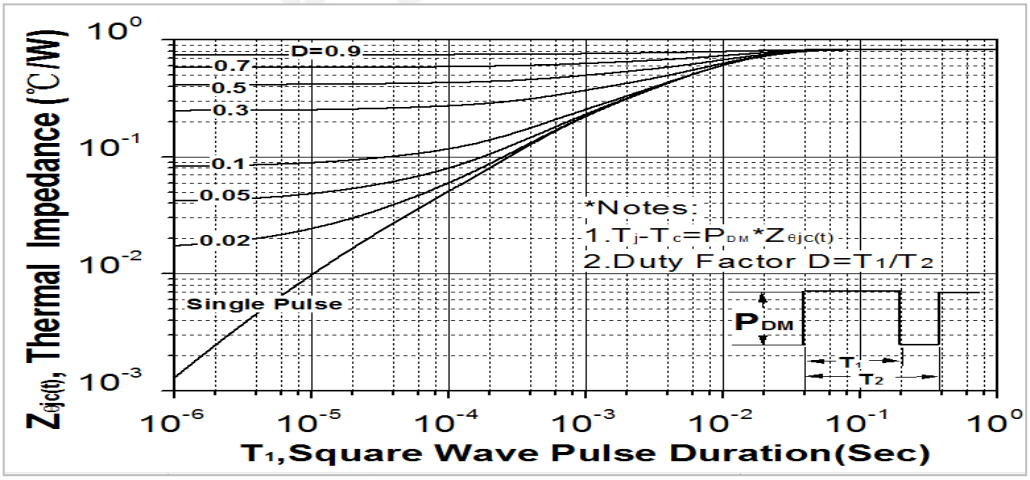

Copyright@ Semipower Technology Co., Ltd. All rights reserved.

Fig. 12. Gate charge test circuit & waveform

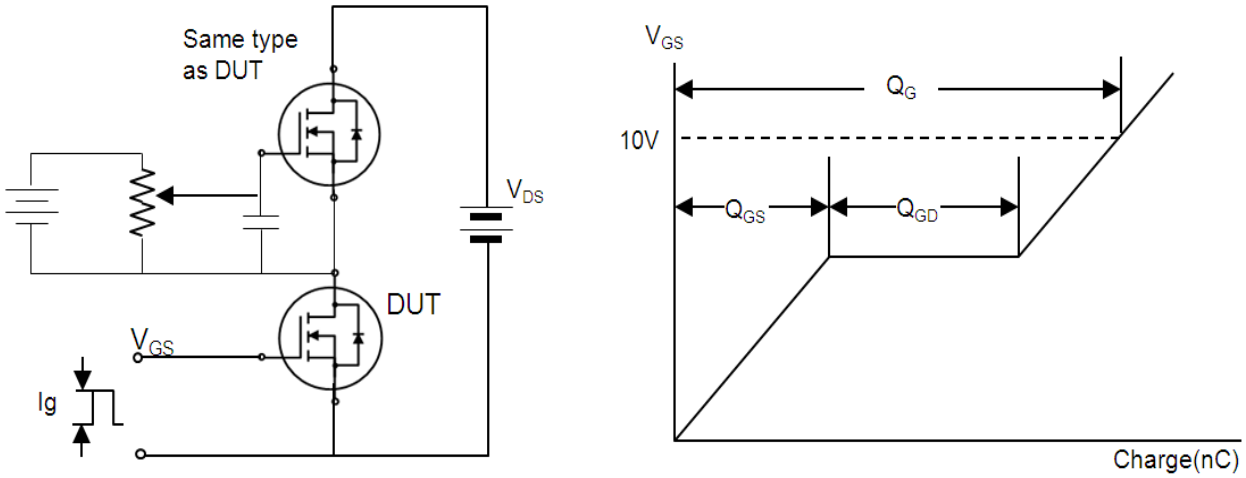

Fig. 13. Switching time test circuit & waveform

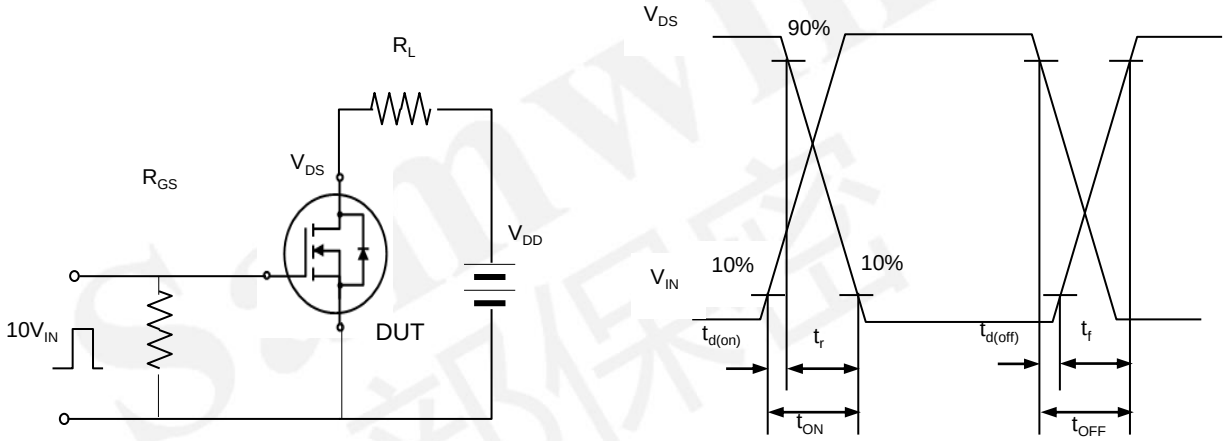

Fig. 14. Unclamped Inductive switching test circuit & waveform

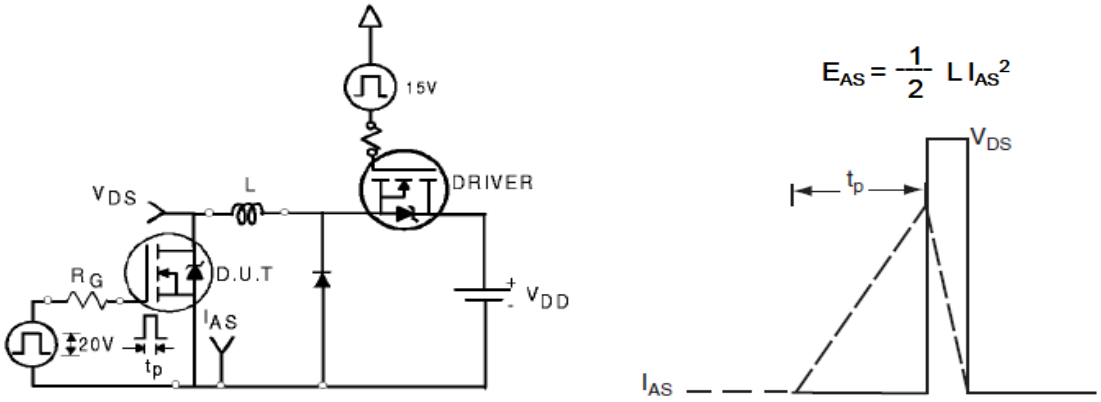

Samwin 内部保密

Fig. 15. Peak diode recovery dv/dt test circuit & waveform

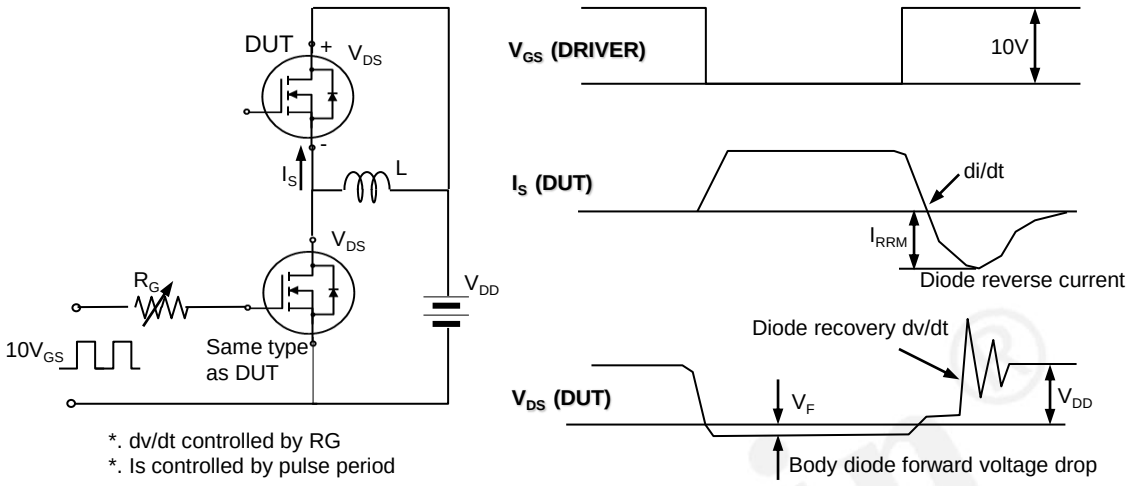

Samwin
内部保密

DISCLAIMER

* All the data & curve in this document was tested in SEMIPOWER TESTING & APPLICATION CENTER.
* This product has passed the PCT,TC,HTRB,HTGB,HAST,PC and Solderdunk reliability testing.
* Qualification standards can also be found on the Web site (**http://www.semipower.com.cn**)
* Suggestions for improvement are appreciated, Please send your suggestions to **samwin@samwinsemi.com**

Copyright@ Semipower Technology Co., Ltd. All rights reserved.